VUE A

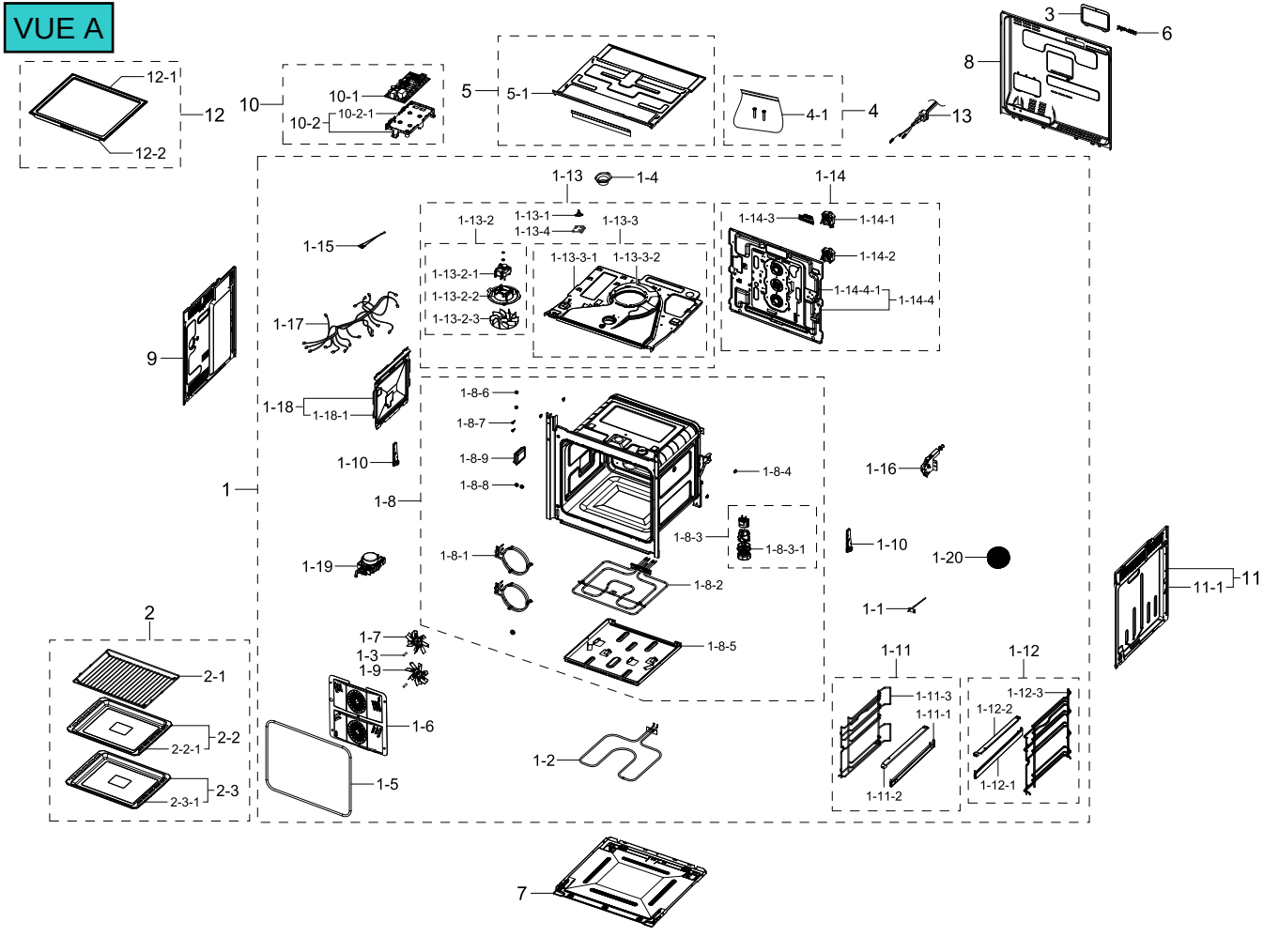
12-1
12
12-2
10
10-1
10-2
10-2-1
5
5-1
4-1
4
13
3
6
8
1-13
1-4
1-14
1-13-2
1-13-1
1-13-4
1-13-3
1-14-3
1-14-1
1-14-2
1-15
1-13-2-1
1-13-2-2
1-13-2-3
1-13-3-1
1-13-3-2
1-14-4-1
1-14-4
1-17
9
1-18
1-18-1
1-8-6
1-8-7
1-8-9
1-8-8
1-8-4
1-16
1-10
1
1-8
1-8-3
1-8-3-1
1-10
1-20
1-19
1-8-1
1-8-2
11
11-1
1-1
2
1-7
1-3
1-9
1-8-5
1-11
1-12
2-1
1-11-3
1-11-1
1-12-3
1-12-2
1-6
2-2
2-2-1
1-2
1-5
2-3
2-3-1
1-11-2
1-12-1
7

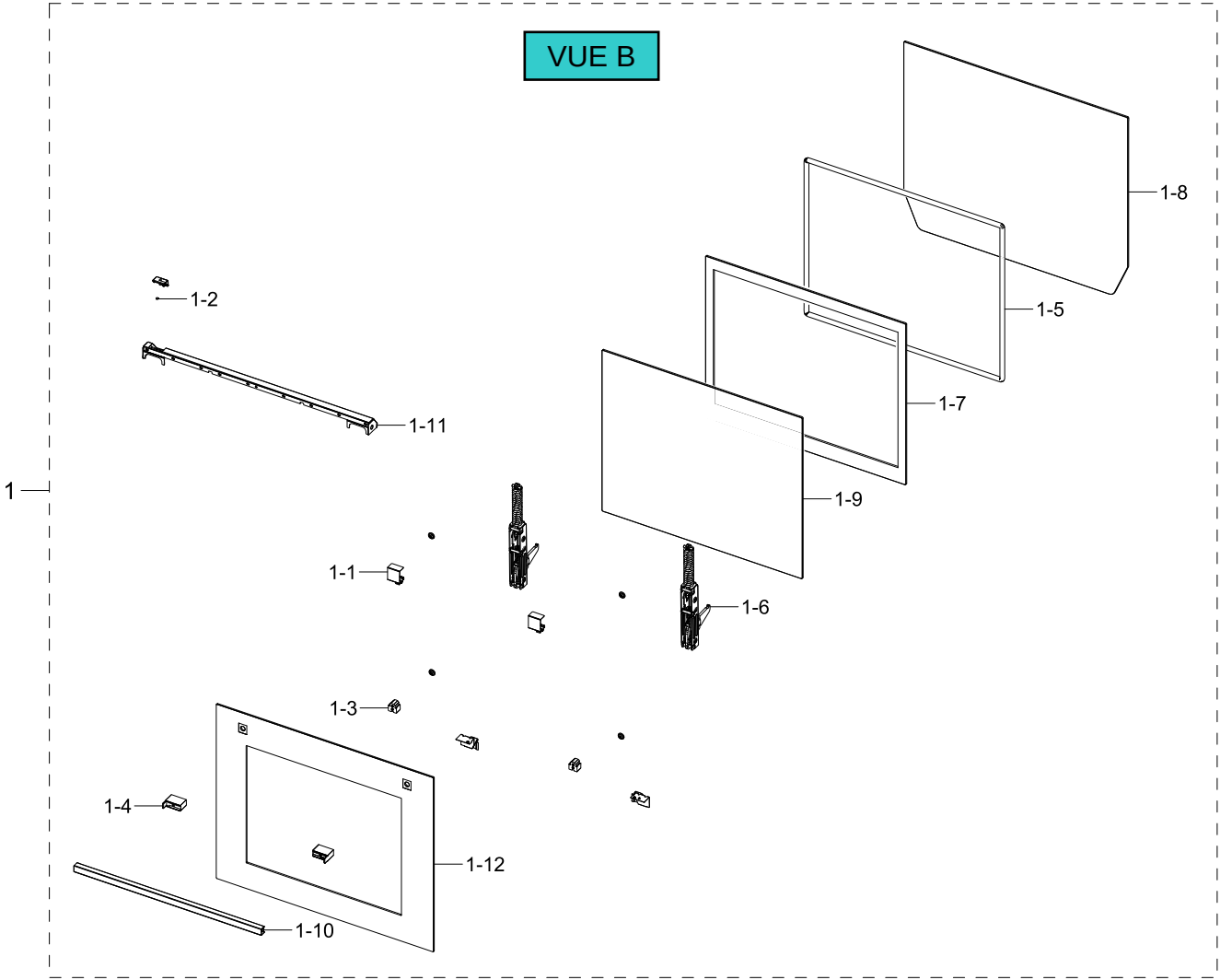
VUE B
1
1-1
1-2
1-3
1-4
1-5
1-6
1-7
1-8
1-9
1-10
1-11
1-12

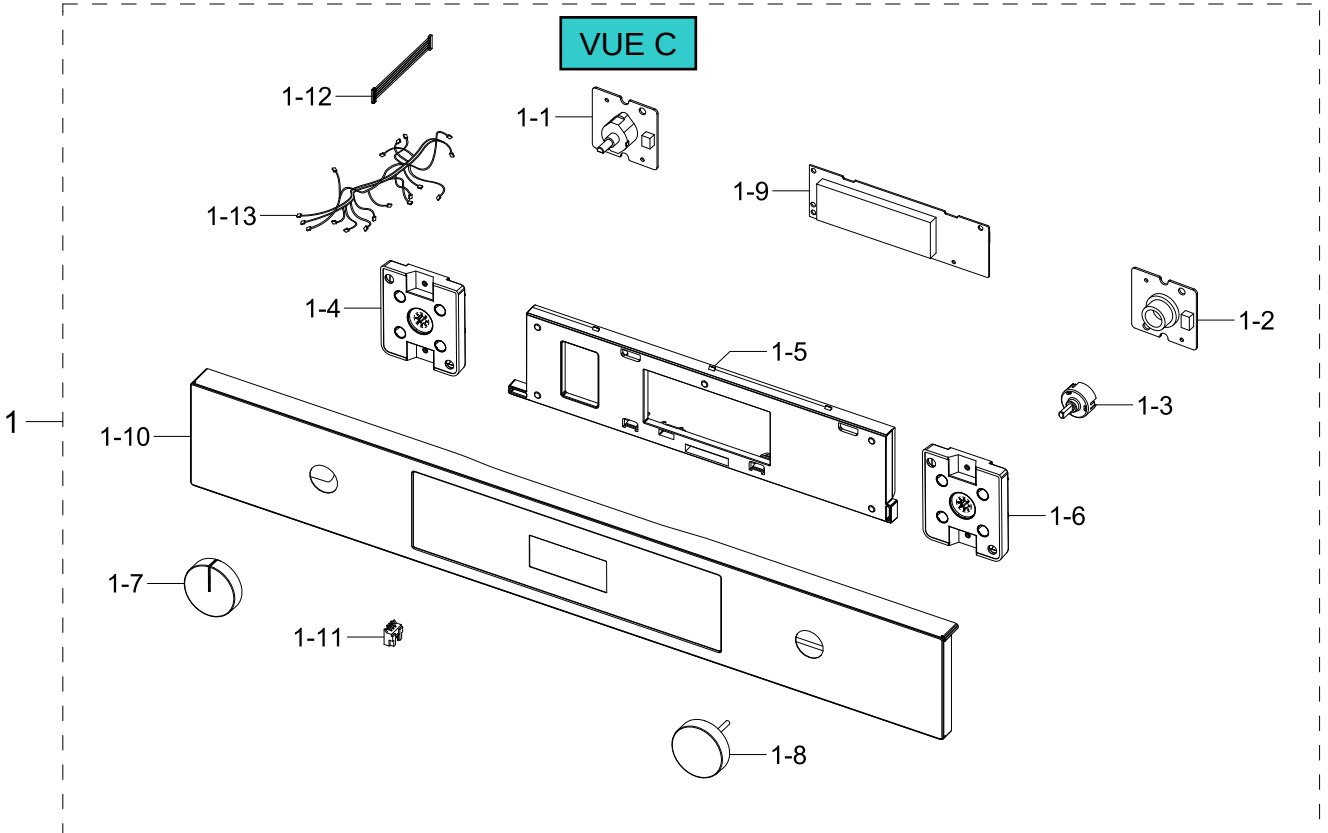
VUE C
1-12
1-1
1-13
1-9
1-4
1-2
1-5
1-3
1
1-10
1-6
1-7
1-11
1-8